Performance Fluids

Innovators in Lubrication Design

	Name	Date
Author	R W	26/02/2020
Checked		
Approved		

PF TRP

1 / 1

A3

250MM TUBE X 2

TIPS X 5

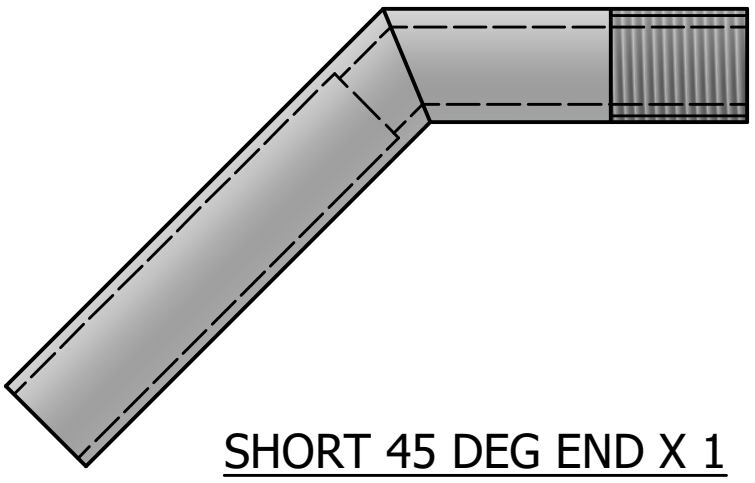

SHORT 45 DEG END X 1

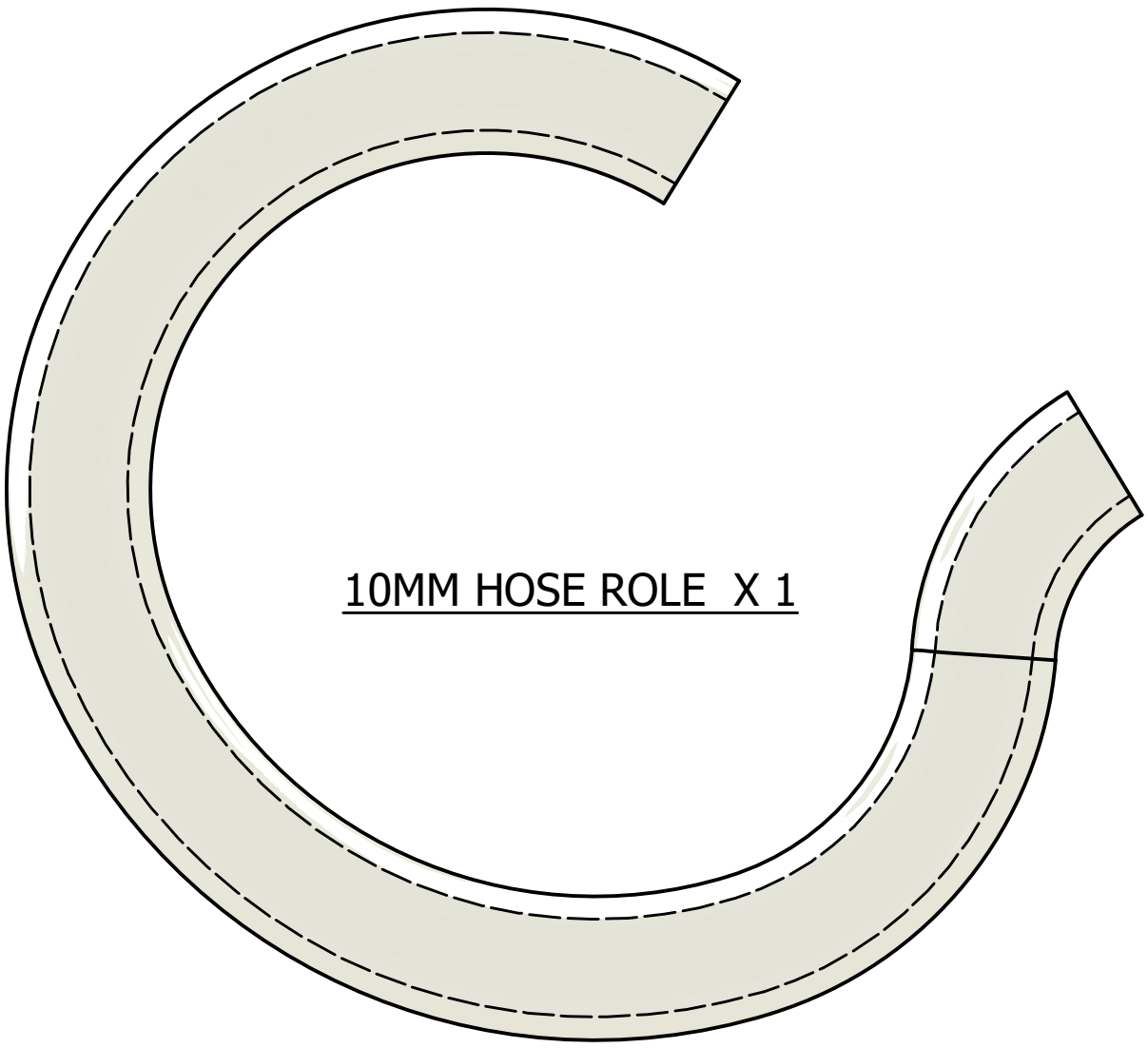

10MM HOSE ROLE X 1

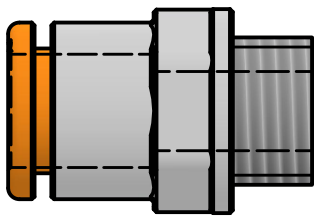

PUSH FITTING X 5

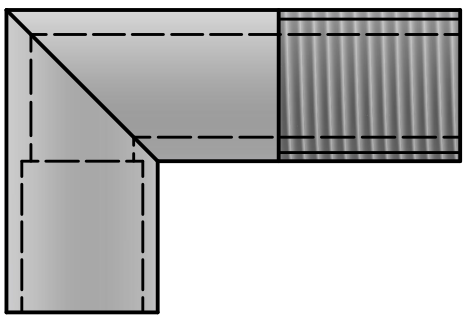

90 DEG END X1

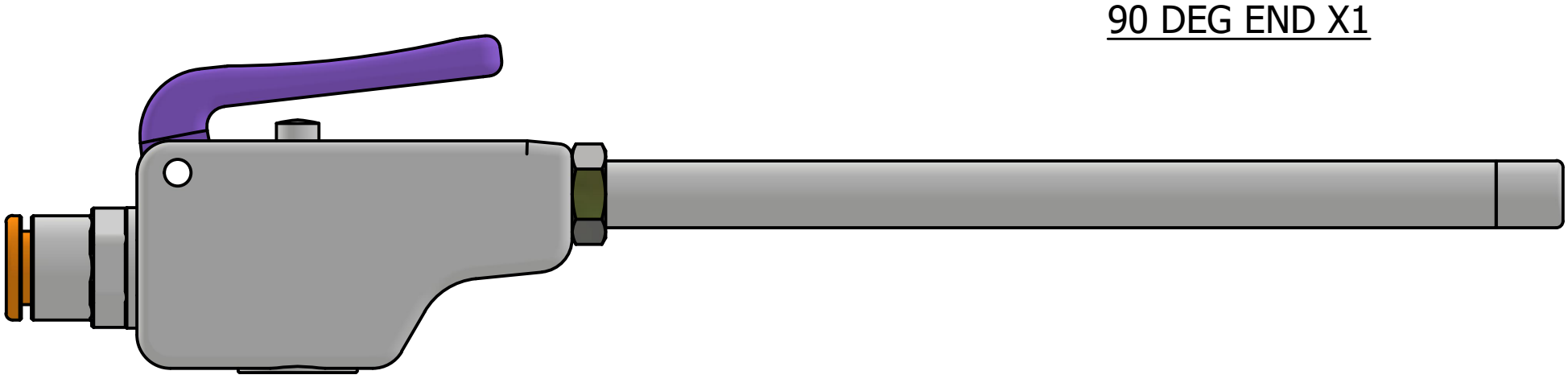

TRIGGER X 1